GTK UK LTD.

PRODUCT SPECIFICATION

3.9” TN TFT LCD MODULE
MODEL: TFTL-0101 Ver:1.4

ROHS

< ◇> Preliminary Specification

< ◆> Finally Specification

CUSTOMER’S APPROVAL	
CUSTOMER :	
SIGNATURE:	DATE:

APPROVED BY	PM REVIEWED	PD REVIEWED	PREPARED BY

Revision History

Revision	Date	Originator	Detail	Remarks
Ver 1.0	2013.11.23		Initial Release	
1.1	2014.01.13		Add Weight Add Current Modify Chromaticity Transmissive Modify Inspection Specification	P4 P5 P6 P15
1.2	2014.02.18		Modify AC Timing Diagram Modify INPUT DATA FORMAT	P11 P12,P13
1.3	2014.07.28		Change LCD panel supplier Modify Contrast ratio Modify Parallel RGB Data Format Modify Inspection Specification Modify Reliability Specification	 P6 P12 P15,18 P20
1.4	2014.08.28		Modify Luminance on TFT	P6

Table of Contents

No. Item Page

1. General Description....4
2. Module Parameter....4
3. Absolute Maximum Ratings....4
4. DC Characteristics....5
5. Backlight Characteristic....5
   5.1. Backlight Characteristics....5
   5.2. Backlighting circuit....5
6. Optical Characteristics....6
   6.1. Optical Characteristics....6
   6.2. Definition of Response Time....6
   6.3. Definition of Contrast Ratio....7
   6.4. Definition of Viewing Angles....7
   6.5. Definition of Color Appearance....7
   6.6. Definition of Surface Luminance, Uniformity and Transmittance....8
7. Block Diagram and Power Supply....9
8. Interface Pins Definition....10
9. AC Characteristics....11
10. AC Timing Diagram....11
11. INPUT DATA FORMAT....12
12. Quality Assurance....13
   12.1 Purpose....13
   12.2 Standard for Quality Test....13
   12.3 Nonconforming Analysis & Disposition....13
   12.4 Agreement Items....13
   12.5Standard of the Product Visual Inspection....13
   12.6 Inspection Specification....14
   12.7 Classification of Defects....19
   12.8 Identification/marking criteria....19
   12.9 Packing....19
13. Reliability Specification....20
14. Precautions and Warranty....21
   14.1 Safety....21
   14.2 Handling....21
   14.3 Storage....21
   14.4 Metal Pin (Apply to Products with Metal Pins)....21
   14.5 Operation....22
   14.6 Static Electricity....22
   14.7 Limited Warranty....22
15. Packaging....23
16. Outline Drawing....24

1. General Description

The specification is a transmissive type color active matrix liquid crystal display (LCD) which uses amorphous thin film transistor (TFT) as switching devices. This product is composed of a TFT-LCD panel, driver ICs and a backlight unit.

2. Module Parameter

Features	Details	Unit
Display Size(Diagonal)	3.9”	
LCD type	TN TFT	
Display Mode	Transmissive /Normally white	
Resolution	480 RGB x 128	Pixels
View Direction	12 O’clock	Best Image
Gray Scale Inversion Direction	6 O’clock	
Module Outline	105.5(H) x 40.64 (V) x 2.95(T) (Note1)	mm
Active Area	95.04(H) x 25.344(V)	mm
Pixel Pitch	198(H) x 198(V)	um
Pixel Arrangement	Stripe	
Polarizer Surface Treatment	Anti-Glare	
Display Colors	16M	
Interface	24-bit RGB interface	
Driver IC	OTA5180A	-
With or Without Touch Panel	Without	
Operating Temperature	-20～70	ºC
Storage Temperature	-30～80	ºC
Weight	28	g

Note 1: Exclusive hooks, posts, FFC/FPC tail etc.

3. Absolute Maximum Ratings

V_{SS}=0V, Ta=25ºC

Item	Symbol	Min.	Max.	Unit
Supply Voltage	VCC	-0.3	4.5	V
Storage temperature	T_{STG}	-30	+80	ºC
Operating temperature	T_{OP}	-20	+70	ºC

Note 1: If Ta below 50ºC, the maximal humidity is 90%RH, if Ta over 50ºC, absolute humidity should be less than 60%RH.

Note 2: The response time will be extremely slow when the operating temperature is around -10℃, and the back ground will become darker at high temperature operating.

4. DC Characteristics

Item		Symbol	Min.	Typ.	Max.	Unit
Digital Interface Supply Voltage		VCC	3.0	3.3	3.6	V
Logic Low input voltage		V_{IL}	GND	-	0.3*VCC	V
Logic High input voltage		V_{IH}	0.7*VCC	-	VCC	V
Logic Low output voltage		V_{OL}	GND	-	GND+0.4	V
Logic High output voltage		V_{OH}	VCC-0.4	-	VCC	V
Current Consumption All Black	Logic Analog	I_{CC+} I_{IN}	-	10	40	mA

5. Backlight Characteristic

5.1. Backlight Characteristics

Item	Symbol	Condition	Min.	Typ.	Max.	Unit
Forward Voltage	V_F	Ta=25 ºC, I_F=20mA/LED	17.4	19.2	20.4	V
Forward Current	I_F	Ta=25 ºC, V_F=3.2V/LED	-	40	-	mA
Power dissipation	P_D		-	768	-	mW
Uniformity	Avg		80	-	-	%
Drive method	Constant current					
LED Configuration	12 White LEDs (6 LEDs in one string and 2 groups in parallel)					

5.2. Backlighting circuit

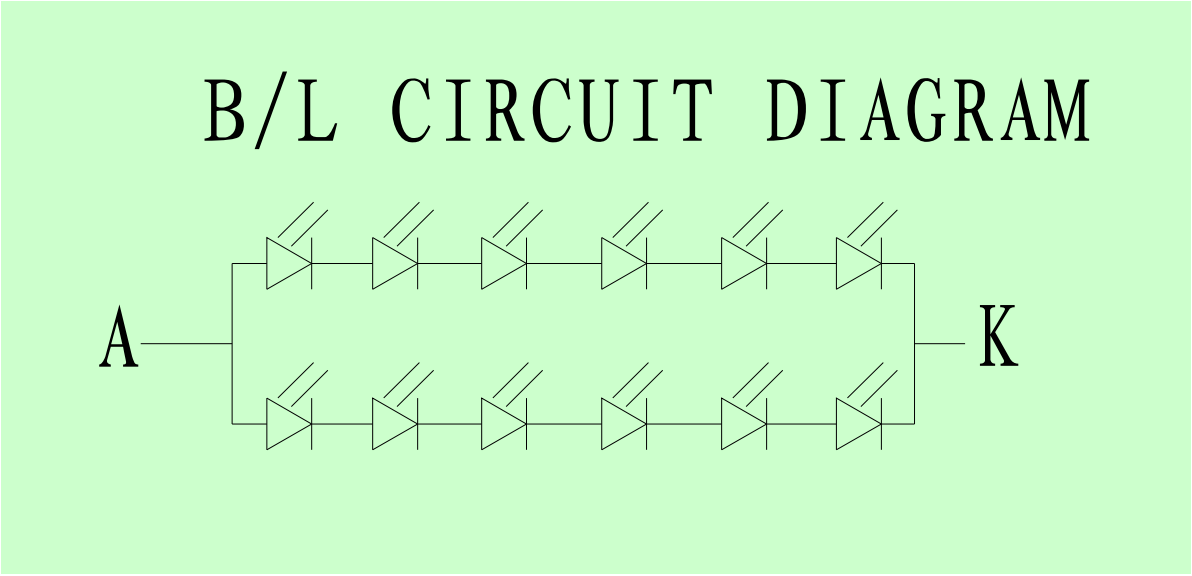

6. Optical Characteristics

6.1. Optical Characteristics

Ta=25ºC, VCC=3.3V, TN LC+ Polarizer

	Item		Symbol	Condition	Specification			Unit
					Min.	Typ.	Max.	
	Luminance on TFT(I_f =20mA/LED)		Lv	Normally viewing angle θX = φY =0º	480	600	-	cd/m²
	Contrast ratio(See 6.3)		CR		350	500	-	
	Response time (See 6.2)		TR+TF		-	30	45	ms
	Chromaticity Transmissive (See 6.5)	Red	XR		0.536	0.586	0.636	
			YR		0.282	0.342	0.382	
		Green	XG		0.284	0.334	0.384	
			YG		0.562	0.612	0.662	
		Blue	XB		0.100	0.150	0.200	
			YB		0.071	0.121	0.171	
		White	XW		0.255	0.305	0.355	
			YW		0.292	0.342	0.392	
	Viewing Angle (See 6.4)	Horizontal	θX+	Center CR≥10	-	60	-	Deg.
			θX-		-	60	-	
		Vertical	φY+		-	50	-	
			φY-		-	55	-	
	NTSC Ratio(Gamut)				-	50	-	%

6.2. Definition of Response Time

6.2.1. Normally Black Type (Negative)

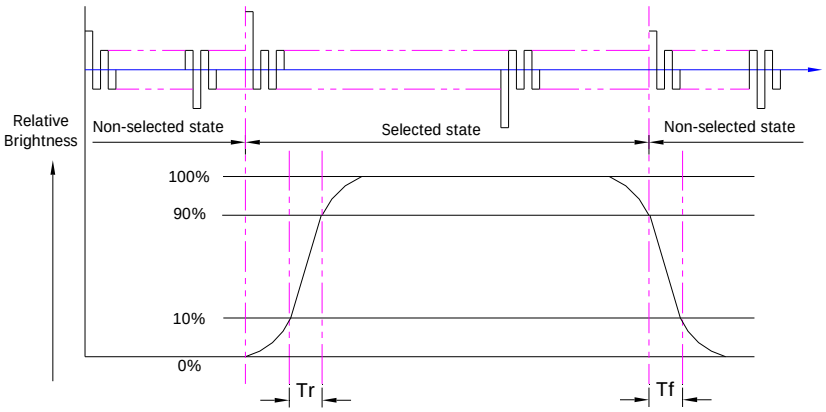

Tr is the time it takes to change form non-selected stage with relative luminance 10% to selected state with relative luminance 90%;
Tf is the time it takes to change from selected state with relative luminance 90% to non-selected state with relative luminance 10%.
Note : Measuring machine: LCD-5100

6.2.2. Normally White Type (Positive)

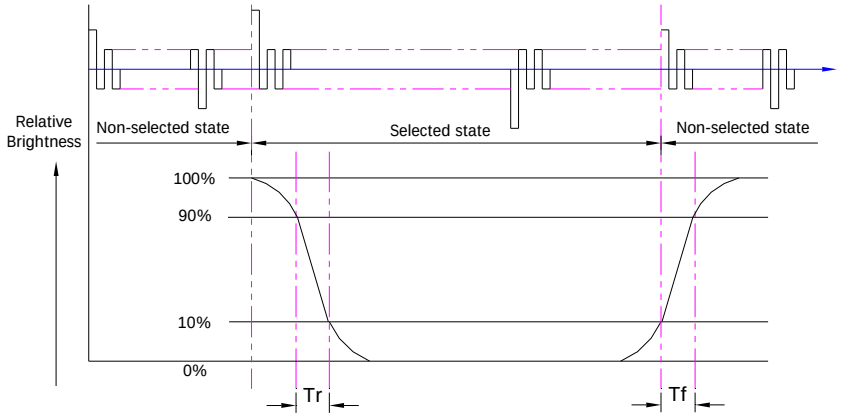

Tr is the time it takes to change form non-selected stage with relative luminance 90% to selected state with relative luminance 10%;

Tf is the time it takes to change from selected state with relative luminance 10% to non-selected state with relative luminance 90%;

Note : Measuring machine: LCD-5100 or EQUI

6.3. Definition of Contrast Ratio

Contrast is measured perpendicular to display surface in reflective and transmissive mode. The measurement condition is:

Measuring Equipment	Eldim or Equivalent
Measuring Point Diameter	3mm//1mm
Measuring Point Location	Active Area centre point
Test pattern	A: All Pixels white
	B: All Pixel black
Contrast setting	Maximum

Definitions: CR (Contrast) = Luminance of White Pixel / Luminance of Black Pixel

6.4. Definition of Viewing Angles

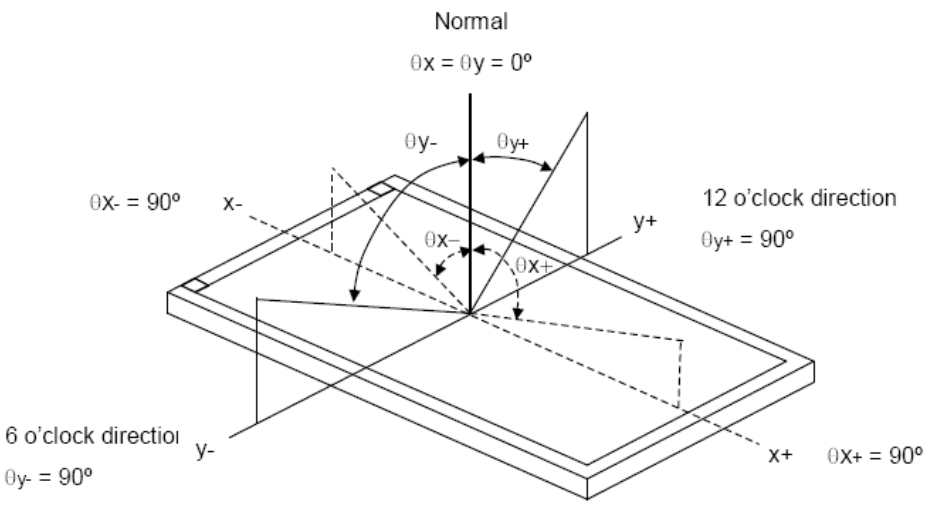

Measuring machine: LCD-5100 or EQUI

6.5. Definition of Color Appearance

R,G,B and W are defined by (x, y) on the IE chromaticity diagram

NTSC=area of RGB triangle/area of NTSC triangleX100%

Measuring picture: Red, Green, Blue and White (Measuring machine: BM-7)

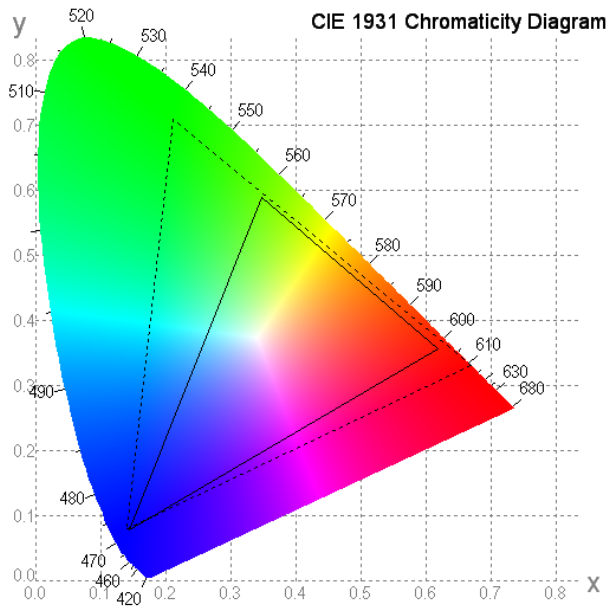

6.6. Definition of Surface Luminance, Uniformity and Transmittance

Using the transmissive mode measurement approach, measure the white screen luminance of the display panel and backlight.

6.6.1. Surface Luminance: L_V = average (L_{P1}:L_{P9})

6.6.2. Uniformity = Minimal (L_{P1}:L_{P9}) / Maximal (L_{P1}:L_{P9}) * 100%

6.6.3. Transmittance = L_V on LCD / L_V on Backlight * 100%

Note : Measuring machine: BM-7

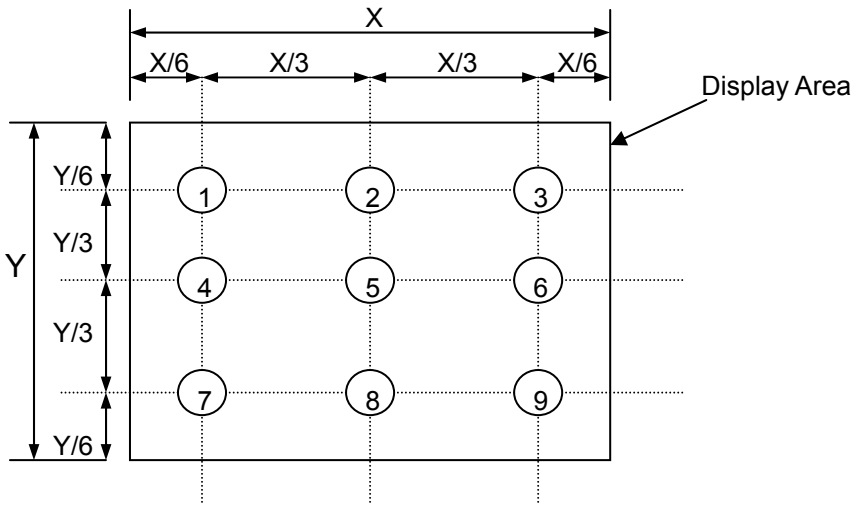

7. Block Diagram and Power Supply

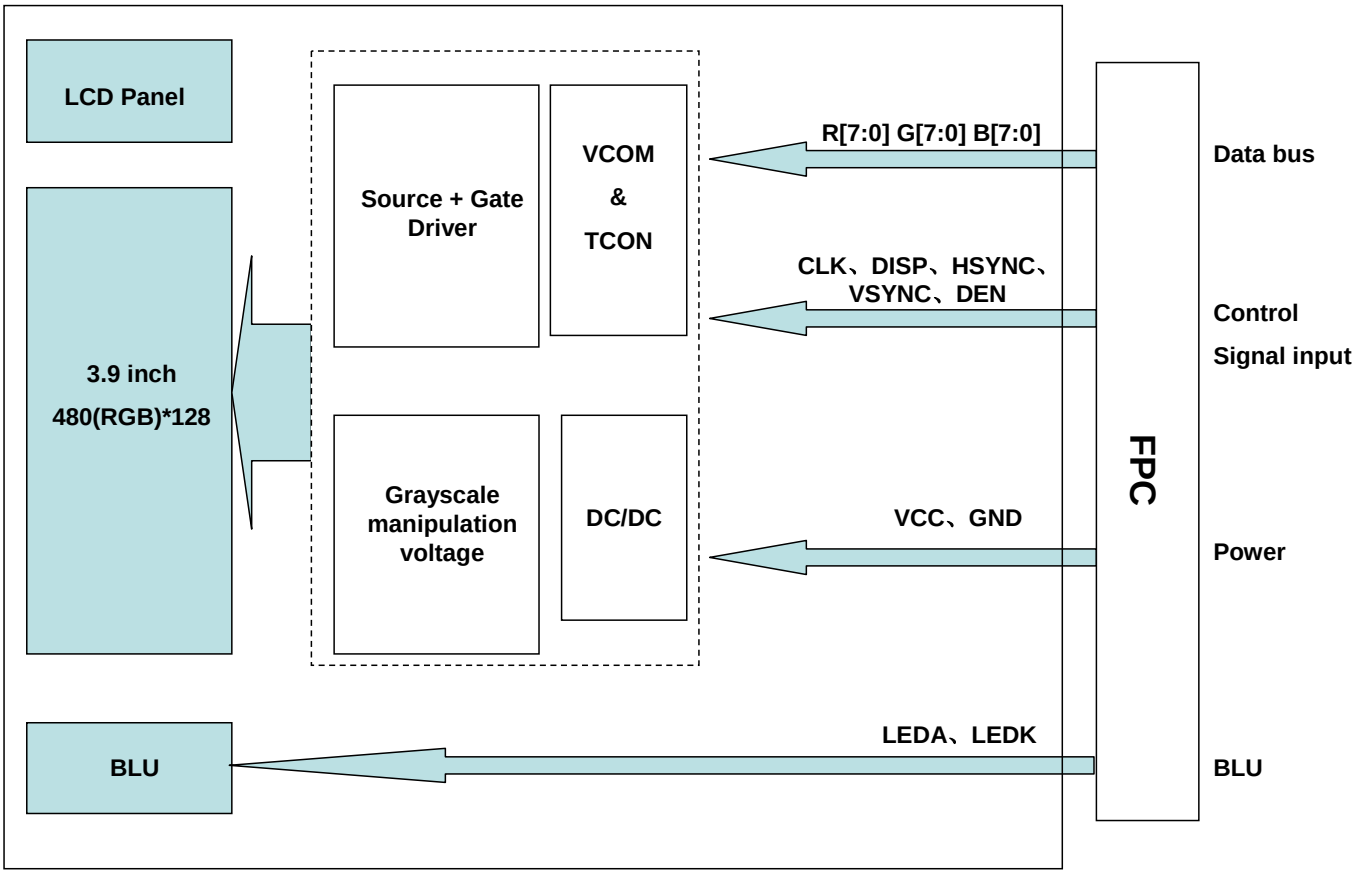

8. Interface Pins Definition

No.	Symbol	Function	Remark
1	LEDK	Backlight Cathode	
2	LEDA	Backlight Anode	
3	GND	Ground	
4	VCC	Power source	
5	R0	Red data signal	
6	R1	Red data signal	
7	R2	Red data signal	
8	R3	Red data signal	
9	R4	Red data signal	
10	R5	Red data signal	
11	R6	Red data signal	
12	R7	Red data signal	
13	G0	Green data signal	
14	G1	Green data signal	
15	G2	Green data signal	
16	G3	Green data signal	
17	G4	Green data signal	
18	G5	Green data signal	
19	G6	Green data signal	
20	G7	Green data signal	
21	B0	Blue data signal	
22	B1	Blue data signal	
23	B2	Blue data signal	
24	B3	Blue data signal	
25	B4	Blue data signal	
26	B5	Blue data signal	
27	B6	Blue data signal	
28	B7	Blue data signal	
29	GND	Ground	
30	CLK	Clock signal to sample each data	
31	DISP	Display on/off signal. DISP=”H” Display on; DISP=”L” Display off	
32	HSYNC	Horizontal synchronizing signal	
33	VSYNC	Vertical synchronizing signal	
34	DEN	Input data enable control. (In SYNC mode this pin should not be used.)	
35	NC	No connection	
36	GND	Ground	
37	NC	No connection	
38	NC	No connection	
39	NC	No connection	
40	NC	No connection	

9. AC Characteristics

VDDIO=1.8V, VDD = 3.3V, AVDD = 6V, AGND = 0V, T_A = -20℃ to 80℃

Item	Symbol	Min.	Typ.	Max.	Unit	Conditions
CLK pulse duty	Tcw	40	50	60	%	
Hsync width	Thw	1.0	-	-	DCLK	
Hsync period	Th	55	60	65	us	
Vsync setup time	Tvst	12	-	-	ns	
Vsync hold time	Tvhd	12	-	-	ns	
Hsync setup time	Thst	12	-	-	ns	
Hsync hold time	Thhd	12	-	-	ns	
Data set-up time	Tdsu	12	-	-	ns	
Data hold time	Tdhd	12	-	-	ns	
DE set-up time	Tdesu	12	-	-	ns	
DE hold time	Tdehd	12	-	-	ns	
SD output stable time	Tst	-	10	12	us	
GD output rise and fall time	Tgst	-	500	1000	ns	

10. AC Timing Diagram

10.1.1 Clock and Data Input Timing Diagram

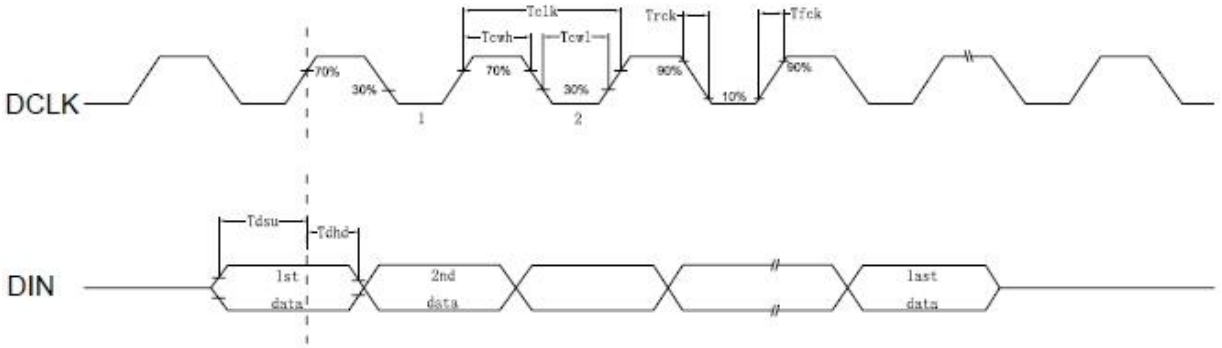

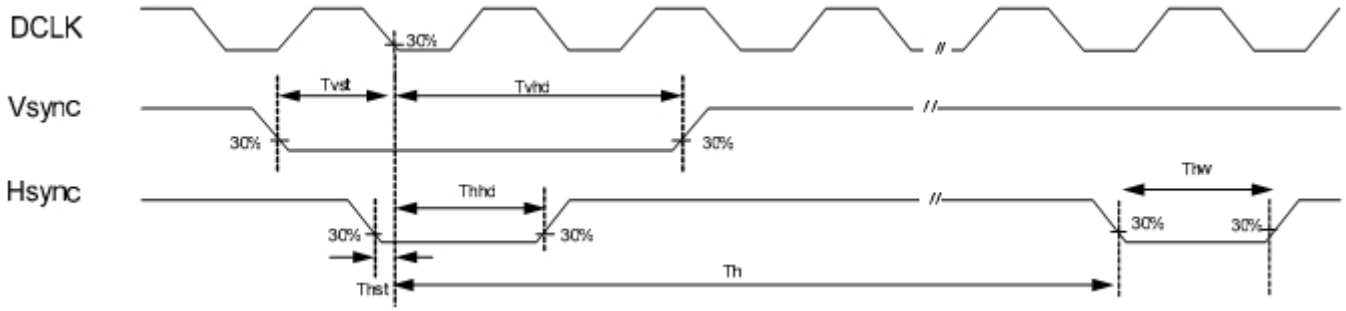

11. INPUT DATA FORMAT

11.1 Parallel RGB Data Format

11.1.1 Parallel RGB Input Timing Table

Item		System	Min.	Typ.	Max.	Unit	
DCLK Frequency		Fclk	-	10.7	-	MHz	
Hsync	Period Time	Th	-	524	-	DCLK	
	Display Period	Thdisp	-	480	-	DCLK	
	Back Porch	Thbp	-	43	-	DCLK	By H_BLANKING setting
	Front Porch	Thfp	-	1	-	DCLK	
	Pulse Width	Thw	-	2	-	DCLK	
Vsync	Period Time	Tv	-	288	-	H	
	Display Period	Tvdisp	-	272	-	H	
	Back Porch	Tvbp	-	12	-	H	By V_BLANKING setting
	Front Porch	Tvfp	-	4	-	H	
	Pulse Width	Tvw	-	2	-	H	

Note: The 1-144 gate lines must be sent black data.

11.1.2 SYNC Mode Timing Diagram

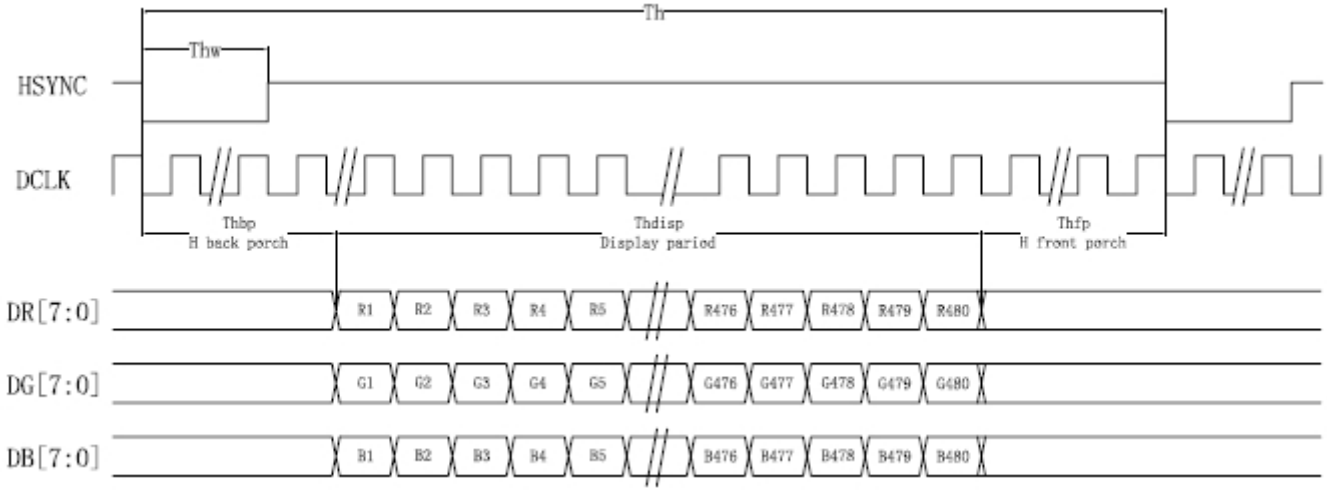

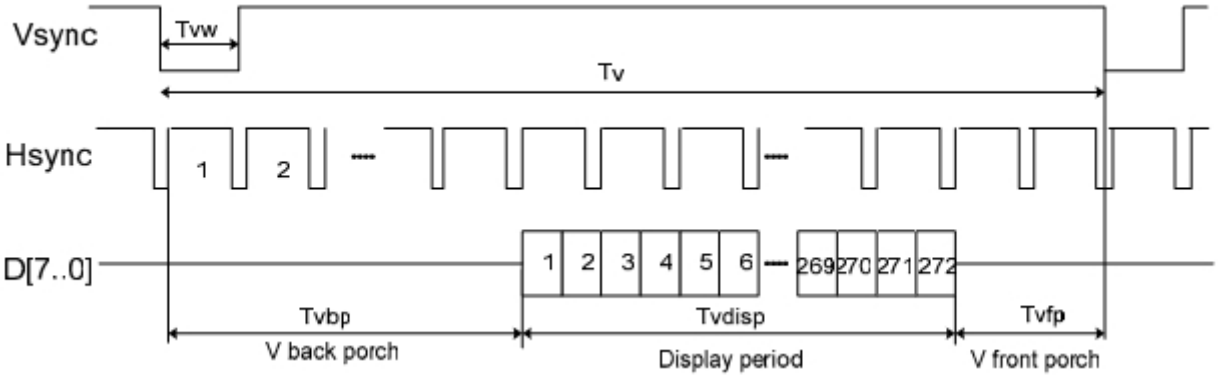

12. Quality Assurance

12.1 Purpose

This standard for Quality Assurance assures the quality of LCD module products supplied to customer.

12.2 Standard for Quality Test

12.2.1 Sampling Plan:

GB2828.1-2003

Single sampling, general inspection level II

12.2.2 Sampling Criteria:

Visual inspection: AQL 1.5%

Electrical functional: AQL 0.65%.

12.2.3 Reliability Test:

Detailed requirement refer to Reliability Test Specification.

12.3 Nonconforming Analysis & Disposition

12.3.1 Nonconforming analysis:

12.3.1.1 Customer should provide overall information of non-conforming sample for their complaints.

12.3.1.2 After receipt of detailed information from customer, the analysis of nonconforming parts usually should be finished in one week.

12.3.1.3 If can not finish the analysis on time, customer will be notified with the progress status.

12.3.2 Disposition of nonconforming:

12.3.2.1 Non-conforming product over PPM level will be replaced.

12.3.2.2 The cause of non-conformance will be analyzed. Corrective action will be discussed and implemented.

12.4 Agreement Items

Shall negotiate with customer if the following situation occurs:

12.4.1 There is any discrepancy in standard of quality assurance.

12.4.2 Additional requirement to be added in product specification.

12.4.3 Any other special problem.

12.5Standard of the Product Visual Inspection

12.5.1 Appearance inspection:

12.5.1.1 The inspection must be under illumination about 1000 – 1500 lx, and the distance of view must be at 30cm ± 2cm.

12.5.1.2 The viewing angle should be 45° from the vertical line without reflection light or follows customer's viewing angle specifications.

12.5.1.3 Definition of area: A Zone: Active Area, B Zone: Viewing Area,

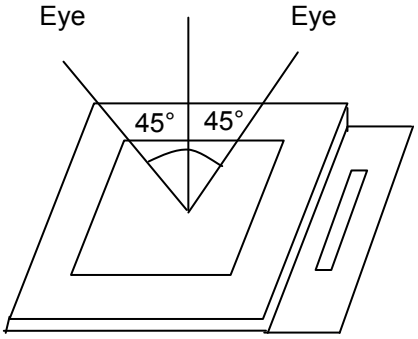

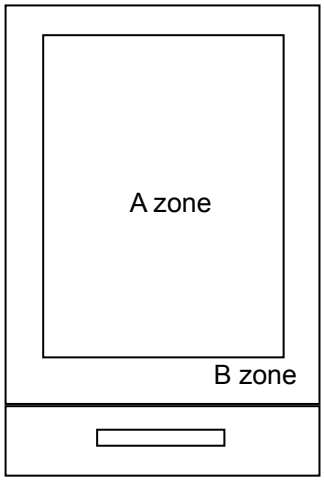

12.5.2 Basic principle:

12.5.2.1 A set of sample to indicate the limit of acceptable quality level must be discussed by both us and customer when there is any dispute happened.

12.5.2.2 New item must be added on time when it is necessary.

12.6 Inspection Specification

<table>
<tr><th>No.</th><th>Item</th><th>Criteria (Unit: mm)</th></tr>
<tr><td>01</td><td>Black / White spot
Foreign material
(Round type)
Pinholes
Stain
Particles inside cell. (Minor defect)</td><td>
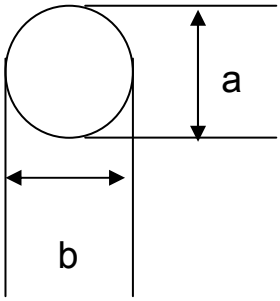

φ= (a + b) /2
<table>
<tr><th>Size \ Area</th><th>Acc. Qty</th></tr>
<tr><td>φ≤0.10</td><td>Ignore</td></tr>
<tr><td>0.10<φ≤0.15</td><td>2</td></tr>
<tr><td>0.15<φ≤0.25</td><td>1</td></tr>
<tr><td>0.25<φ</td><td>0</td></tr>
<tr><td>Total</td><td>2 no include φ≤ 0.10</td></tr>
</table>
Distance between 2 defects should more than 3mm apart.
</td></tr>
<tr><td>02</td><td>Electrical Defect
(Minor defect)</td><td>
<table>
<tr><td></td><td>Display Area</td><td>Total</td><td rowspan="4">Note1</td></tr>
<tr><td>Bright dot</td><td>0</td><td>0</td></tr>
<tr><td>Dark dot</td><td>N≤2</td><td>N≤2</td></tr>
<tr><td>Total dot</td><td>N≤2</td><td>N≤2</td></tr>
<tr><td>Mura</td><td colspan="2">Not visible through 5% ND filters.</td><td>Note 2</td></tr>
</table>
Remark:
1. Bright dot caused by scratch and foreign object accords to item 1.
</td></tr>
</table>

<table>
<tr>
<td>03</td>
<td>Inactive Area
(Minor defect)</td>
<td>
Line Criteria: L≦1mm, W≦0.1mm,
Dot Criteria: Please refer to Note 1,2&3
Note1: Definition of Area
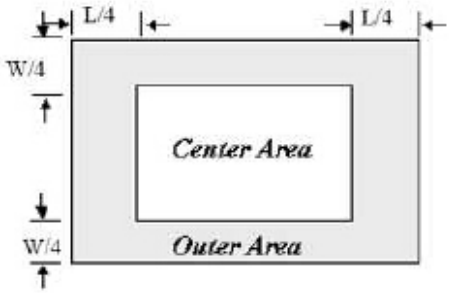

Note 2:
<table>
<tr><th>Size</th><th>Inactive dot</th><th>Center</th><th>Outer</th><th>Total</th><th>Remark</th></tr>
<tr><td>All</td><td>Φ＜0.2mm</td><td colspan="4">Is not counted</td></tr>
<tr><td>＜6”</td><td>0.2≤Φ≤0.3mm
L≤1mm,W≤0.1mm</td><td>N≤1</td><td>N≤2</td><td>N≤3</td><td></td></tr>
</table>
Remark:
Effective area is from the POL cutting side to 0.5mm of inside. This is no count area. Other part is effective area. In no count area, any defect can ignore. In effective area, have to judge from above-mentioned specification.
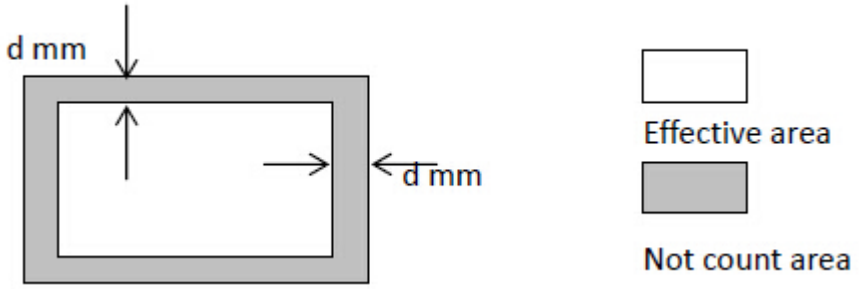

</td>
</tr>
<tr>
<td>04</td>
<td>Black and White line
Scratch
Foreign material
(Line type)
(Minor defect)</td>
<td>
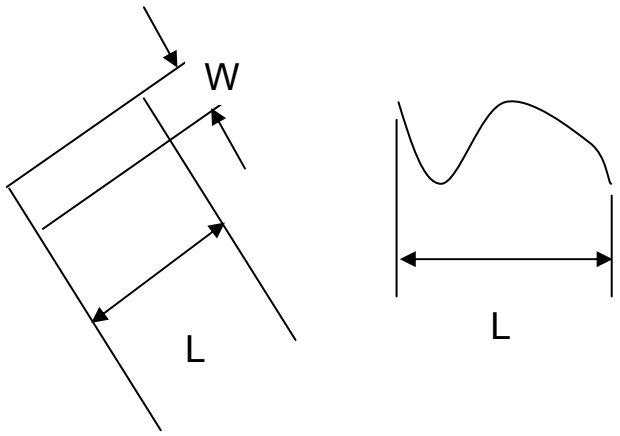

</td>
</tr>
</table>

<table>
<tr><td></td><td></td><td>
<table>
<tr><th>Length</th><th>Width</th><th>Acc. Qty</th></tr>
<tr><td>/</td><td>W ≦ 0.03</td><td>Ignore</td></tr>
<tr><td>L ≦ 2.5</td><td>0.03 ＜ W ≦ 0.05</td><td>3</td></tr>
<tr><td>L ≦ 2.5</td><td>0.05 ＜ W ≦ 0.10</td><td>2</td></tr>
<tr><td>/</td><td>0.1 ＜ W</td><td>0</td></tr>
<tr><td colspan="2">Total</td><td>3</td></tr>
</table>
Distance between 2 defects should more than 3mm apart. Scratches not viewable through the back of the display are acceptable.
</td></tr>
<tr><td>05</td><td>Glass Crack
(Minor defect)</td><td>
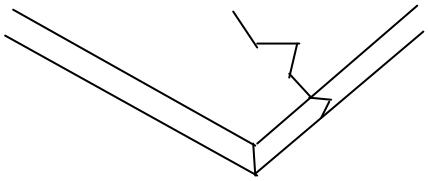
Crack is potential to enlarge, any type is not allowed.
</td></tr>
</table>

<table>
<tr><td>06</td><td>Glass Chipping Pad Area:
(Minor defect)
 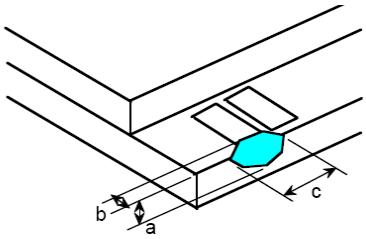
</td><td>
<table>
<tr><th>Length and Width</th><th>Acc. Qty</th></tr>
<tr><td>c > 3.0, b< 1.0</td><td>1</td></tr>
<tr><td>c< 3.0, b< 1.0</td><td>3</td></tr>
<tr><td colspan="2">a<Glass Thickness</td></tr>
</table>
</td></tr>
<tr><td>07</td><td>Glass Chipping Rear of Pad Area:
(Minor defect)
 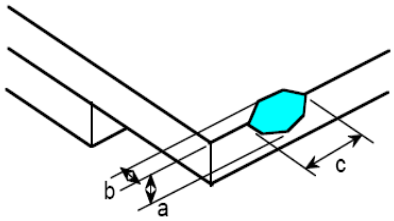
</td><td>
<table>
<tr><th>Length and Width</th><th>Acc. Qty</th></tr>
<tr><td>c > 3.0, b< 1.0</td><td>1</td></tr>
<tr><td>c< 3.0, b< 1.0</td><td>2</td></tr>
<tr><td>c< 3.0, b< 0.5</td><td>4</td></tr>
<tr><td colspan="2">a<Glass Thickness</td></tr>
</table>
</td></tr>
</table>

<table>
<tr><td>08</td><td>Glass Chipping Except Pad Area:
(Minor defect)
 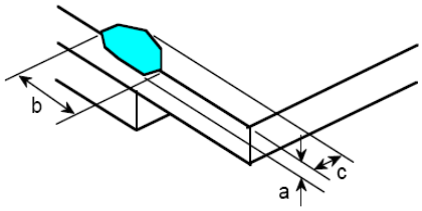
</td><td><table><tr><th>Length and Width</th><th>Acc. Qty</th></tr><tr><td>c > 3.0, b< 1.0</td><td>1</td></tr><tr><td>c< 3.0, b< 1.0</td><td>2</td></tr><tr><td>c< 3.0, b< 0.5</td><td>4</td></tr><tr><td colspan="2">a<Glass Thickness</td></tr></table></td></tr>
<tr><td>09</td><td>Glass Corner Chipping:
(Minor defect)
 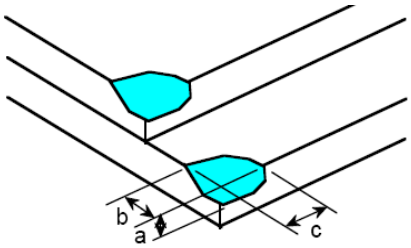
</td><td><table><tr><th>Length and Width</th><th>Acc. Qty</th></tr><tr><td>c < 3.0, b< 3.0</td><td>Ignore</td></tr><tr><td colspan="2">a<Glass Thickness</td></tr></table></td></tr>
<tr><td>10</td><td>Glass Burr:
(Minor defect)
 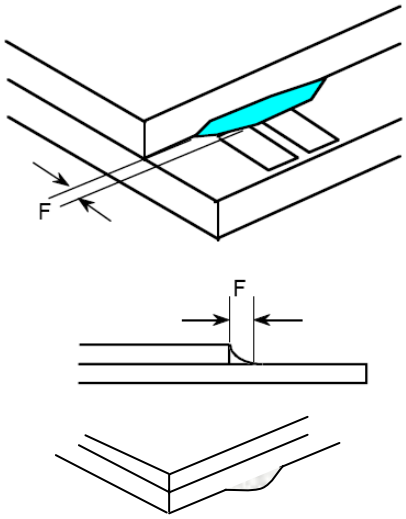
</td><td><table><tr><th>Length</th><th>Acc. Qty</th></tr><tr><td>F < 1.0</td><td>Ignore</td></tr></table>
Glass burr don’t affect assemble and module dimension.</td></tr>
<tr><td>11</td><td>FPC Defect:
(Minor defect)
 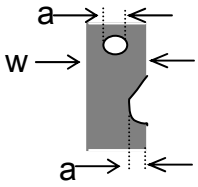
</td><td>11.1 Dent, pinhole width a<w/3.
(w: circuitry width.)
11.2 Open circuit is unacceptable.
11.3 No oxidation, contamination and distortion.</td></tr>
</table>

<table>
<tr><td>12</td><td>Bubble on Polarizer
(Minor defect)</td><td><table><tr><td>Diameter</td><td>Acc. Qty</td></tr><tr><td>φ≤0.20</td><td>Ignore</td></tr><tr><td>0.20 <φ≤0.30</td><td>4</td></tr><tr><td>0.30 <φ≤0.50</td><td>1</td></tr><tr><td>0.50 < φ</td><td>None</td></tr></table></td></tr>
<tr><td>13</td><td>Dent on Polarizer
(Minor defect)</td><td><table><tr><td>Diameter</td><td>Acc. Qty</td></tr><tr><td>φ≤0.20</td><td>Ignore</td></tr><tr><td>0.20 <φ≤0.30</td><td>4</td></tr><tr><td>0.30 <φ≤0.50</td><td>1</td></tr><tr><td>0.50 < φ</td><td>None</td></tr></table></td></tr>
<tr><td>14</td><td>Bezel</td><td>14.1 No rust, distortion on the Bezel.
14.2 No visible fingerprints, stains or other contamination.</td></tr>
<tr><td>15</td><td>Touch Panel</td><td>D: Diameter W: width L: length
15.1 Spot: D<0.25 is acceptable
0.25≤D≤0.4
2dots are acceptable and the distance between defects should more than 10 mm.
D>0.4 is unacceptable
15.2 Dent: D>0.40 is unacceptable
15.3 Scratch: W≤0.03, L≤10 is acceptable,
0.03<W≤0.10, L≤10 is acceptable
Distance between 2 defects should more than 10 mm.
W>0.10 is unacceptable.</td></tr>
<tr><td>16</td><td>PCB</td><td>16.1 No distortion or contamination on PCB terminals.
16.2 All components on PCB must same as documented on the BOM/component layout.
16.3 Follow IPC-A-600F.</td></tr>
<tr><td>17</td><td>Soldering</td><td>Follow IPC-A-610C standard</td></tr>
<tr><td>18</td><td>Electrical Defect
(Major defect)</td><td>The below defects must be rejected.
18.1 Missing vertical / horizontal segment,
18.2 Abnormal Display.
18.3 No function or no display.
18.4 Current exceeds product specifications.
18.5 LCD viewing angle defect.
18.6 No Backlight.</td></tr>
</table>

		18.7 Dark Backlight. 18.8 Touch Panel no function.

Remark: LCD Panel Broken shall be rejected. Defect out of LCD viewing area is acceptable.

12.7 Classification of Defects

12.7.1 Visual defects (Except no / wrong label) are treated as minor defect and electrical defect is major.

12.7.2 Two minor defects are equal to one major in lot sampling inspection.

12.8 Identification/marking criteria

Any unit with illegible / wrong /double or no marking/ label shall be rejected.

12.9 Packing

12.9.1 There should be no damage of the outside carton box, each packaging box should have one identical label.

12.9.2 Modules inside package box should have compliant mark.

12.9.3 All direct package materials shall offer ESD protection

Note1: Bright dot is defined as the defective area of the dot is larger than 50% of one sub-pixelarea.

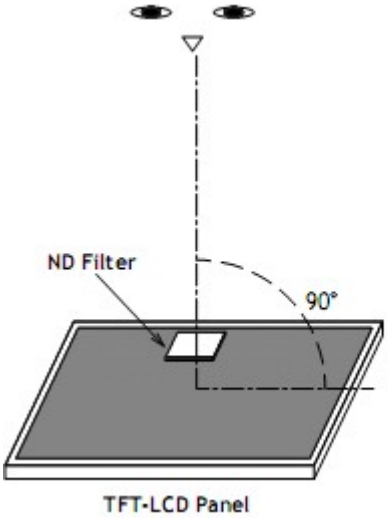

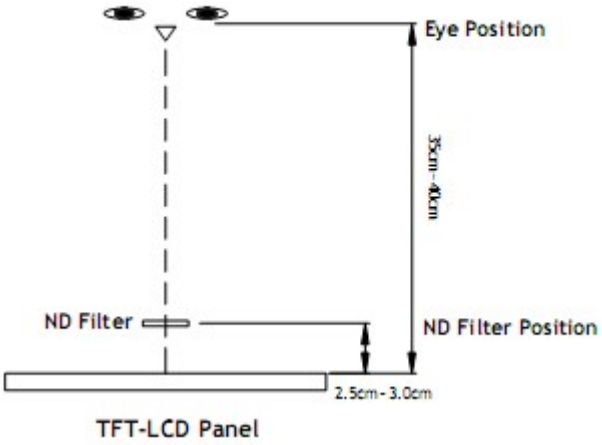

Bright dot: The bright dot size defect at black display pattern. It can be recognized by 2% transparency of filter when the distance between eyes and panel is 350mm±50mm.

Dark dot: Cyan, Magenta or Yellow dot size defect at white display pattern. It can be recognized by 5% transparency of filter when the distance between eyes and panel is 350mm±50mm.

Note2: Mura on display which appears darker / brighter against background brightness on parts of display area

13. Reliability Specification

No	Item	Condition	Quantity	Criteria
1	High Temperature Operating	70℃, 96Hrs	2	GB/T2423.2 -2008
2	Low Temperature Operating	-20℃, 96Hrs	2	GB/T2423.1 -2008
3	High Humidity	50℃, 90%RH, 96Hrs	2	GB/T2423.3 -2006
4	High Temperature Storage	80℃, 96Hrs	2	GB/T2423.2 -2008
5	Low Temperature Storage	-30℃, 96Hrs	2	GB/T2423.1 -2008
6	Thermal Cycling Test	-20℃, 60min~70℃, 60min, 20 cycles.	2	GB/T2423.22 -2012
7	Packing vibration	Frequency range:10Hz~50Hz Acceleration of gravity:5G X, Y, Z 30 min for each direction.	2	GB/T5170.14 -2009
8	Electrical Static Discharge	Air:±8KV 150pF/330Ω 5 times	2	GB/T17626.2 -2006
		Contact:±4KV 150pF/330Ω 5 times		
9	Drop Test (Packaged)	Height:80 cm,1 corner, 3 edges, 6 surfaces.	2	GB/T2423.8 -1995

Note1. No defection cosmetic and operational function allowable.

Note2. Total current Consumption should be below double of initial value.

14. Precautions and Warranty

14.1 Safety

14.1.1 The liquid crystal in the LCD is poisonous. Do not put it in your mouth. If the liquid crystal touches your skin or clothes, wash it off immediately using soap and water.

14.1.2 Since the liquid crystal cells are made of glass, do not apply strong impact on them. Handle with care.

14.2 Handling

14.2.1 Reverse and use within ratings in order to keep performance and prevent damage.

14.2.2 Do not wipe the polarizer with dry cloth, as it might cause scratch. If the surface of the LCD needs to be cleaned, wipe it swiftly with cotton or other soft cloth soaked with petroleum IPA, do not use other chemicals.

14.3 Storage

14.3.1 Do not store the LCD module beyond the specified temperature ranges.

14.4 Metal Pin (Apply to Products with Metal Pins)

14.4.1 Pins of LCD and Backlight

14.4.1.1 Solder tip can touch and press on the tip of Pin LEAD during the soldering

14.4.1.2 Recommended Soldering Conditions

Solder Type: Sn96.3~94-Ag3.3~4.3-Cu0.4~1.1

Maximum Solder Temperature: 370℃

Maximum Solder Time: 3s at the maximum temperature

Recommended Soldering Temp: 350±20℃

Typical Soldering Time: ≤3s

14.4.1.3 Solder Wetting

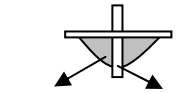

Recommended

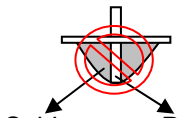

Not Recommended

14.4.2 Pins of EL

14.4.2.1 Solder tip can touch and press on the tip of EL leads during soldering.

14.4.2.2 No Solder Paste on the soldering pad on the motherboard is recommended.

14.4.2.3 Recommended Soldering Conditions

Solder type: Nippon Alimit Leadfree SR-34, size 0.5mm

Recommended Solder Temperature: 270～290℃

Typical Soldering Time: ≤2s

Minimum solder distance from EL lamp (body):2.0mm

14.4.2.4 No horizontal press on the EL leads during soldering.

14.4.2.5 180° bend EL leads three times is not allowed.

14.4.2.6 Solder Wetting

Recommended Not Recommended

14.4.2.7 The type of the solder iron:

Recommended Not Recommended

14.4.2.8 Solder Pad

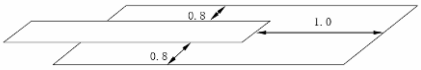

14.5 Operation

14.5.1 Do not drive LCD with DC voltage

14.5.2 Response time will increase below lower temperature

14.5.3 Display may change color with different temperature

14.5.4 Mechanical disturbance during operation, such as pressing on the display area, may cause the segments to appear “fractured”.

14.6 Static Electricity

14.6.1 CMOS LSIs are equipped in this unit, so care must be taken to avoid the electro-static charge, by ground human body, etc.

14.6.2 The normal static prevention measures should be observed for work clothes and benches.

14.6.3 The module should be kept into anti-static bags or other containers resistant to static for storage.

14.7 Limited Warranty

14.7.1 Our warranty liability is limited to repair and/or replacement. We will not be responsible for any consequential loss.

14.7.2 If possible, we suggest customer to use up all modules in six months. If the module storage time over twelve months, we suggest that recheck it before the module be used.

14.7.3 After the product shipped, any product quality issues must be feedback within three months, otherwise, we will not be responsible for the subsequent or consequential events.

15. Packaging

TBD
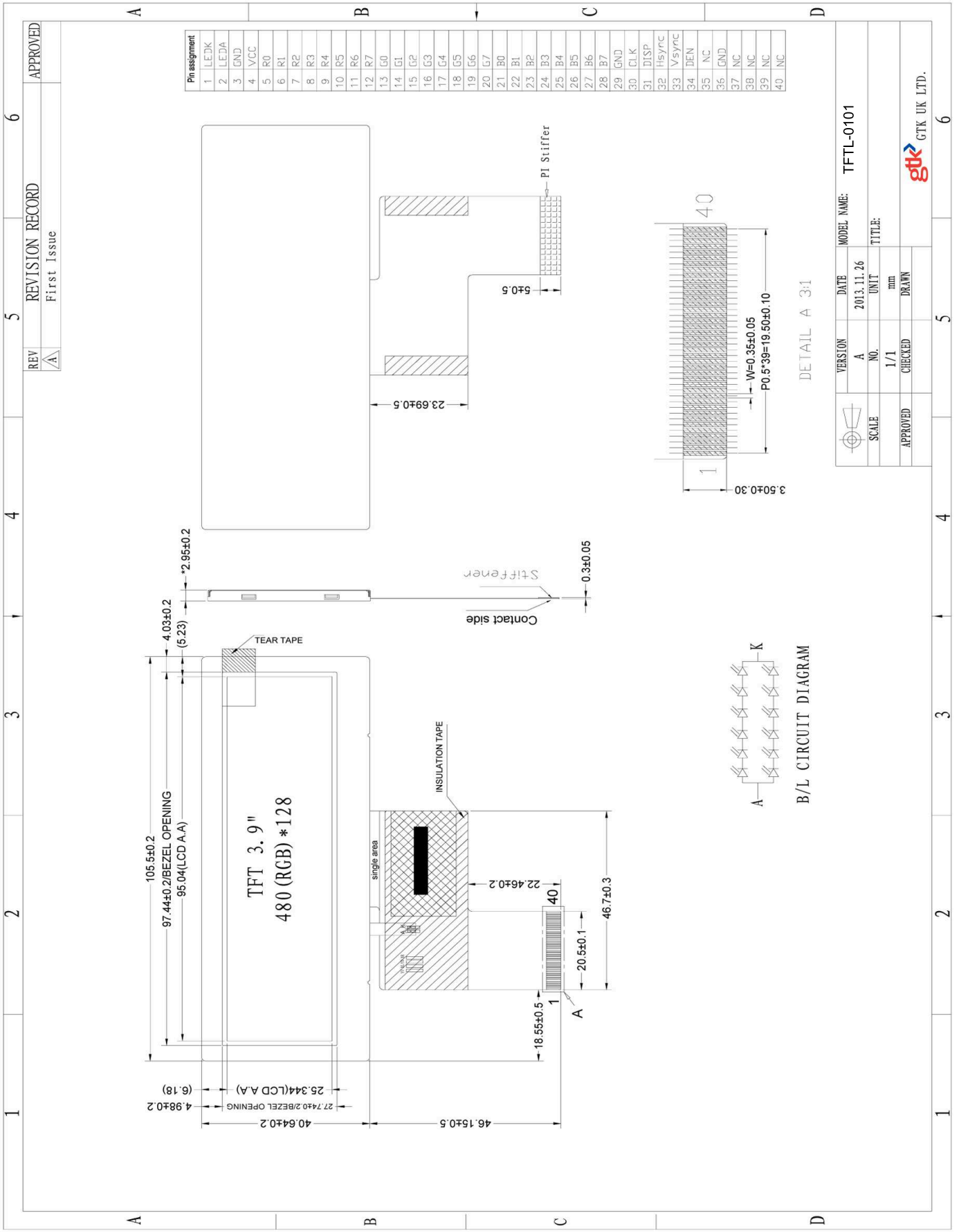
16. Outline Drawing