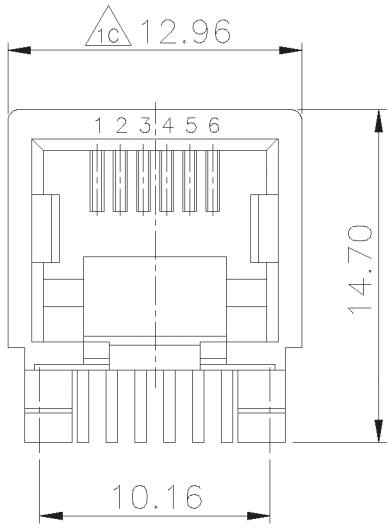

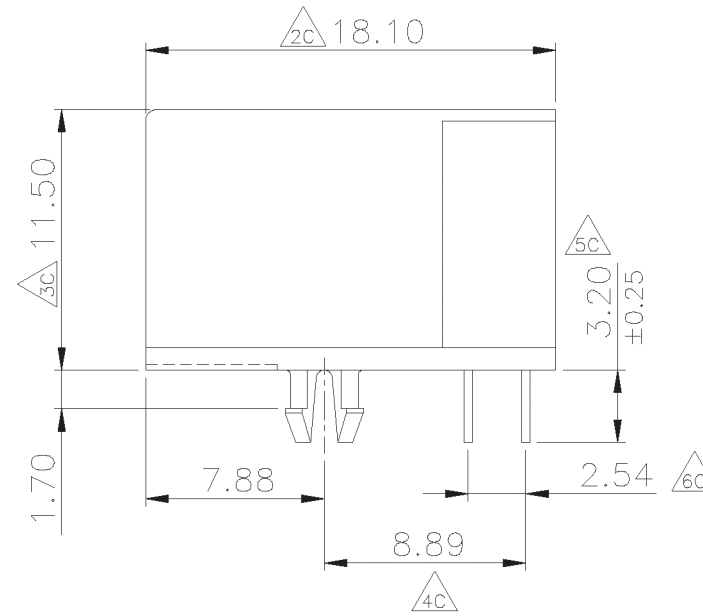

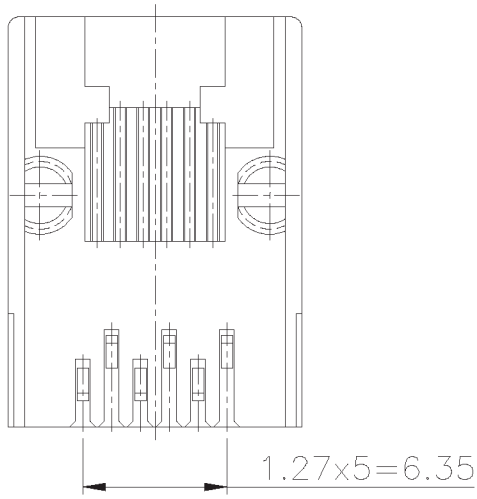

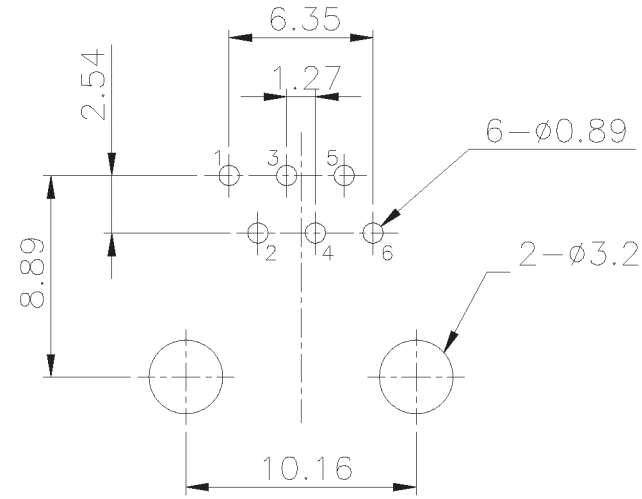

PCB LAYOUT/TOP VIEW

MATERIALS:

PLASTIC HOUSING: ENGINEERING THERMOPLASTIC
FLAMMABILITY RATING UL 94V-0.

CONTACTS: PHOSPHOR BRONZE
PLATING: GOLD PLATING OVER NICKEL IN CONTACT, 6μ"
TIN PLATING OVER NICKEL IN SOLDER AREA.

ROHS COMPLIANT

設計 DR. Kathy Chung 94-02-16	核准 APPD. Jerry 94-02-16	容許公差	TOLERANCE	品名 ARTICLE	6P6C SIDE ENTRY JACK		
版本說明	REVISION NOTE	.XXX	±0.10	圖號 DWG NO.	MTC-6610NBLNF-R		
		.XX	±0.25				
		.X	±0.38				
		X	±0.50				
		ANG	±3°				
GTK UK LTD.				單位 UNIT mm	比例 SCALE 3/1	張數 SHEET 1/1	版本 A