FOR CUSTOMER

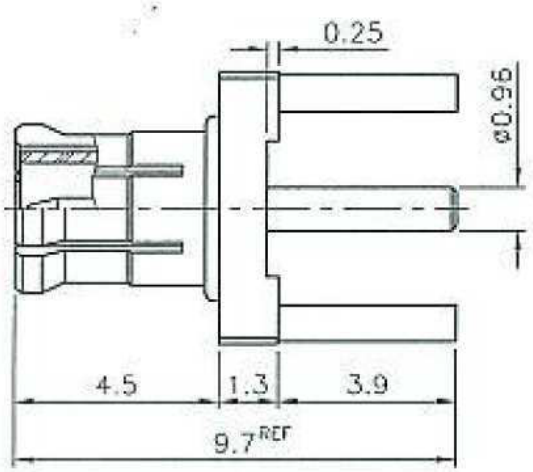

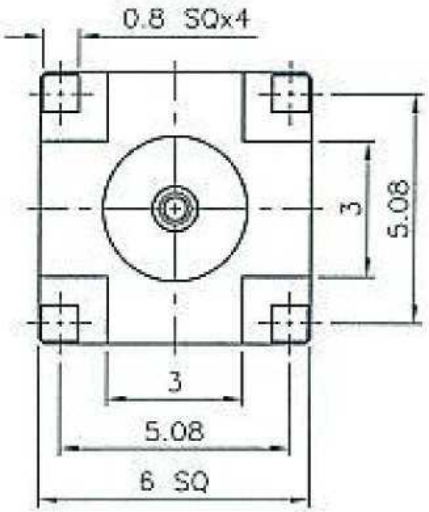

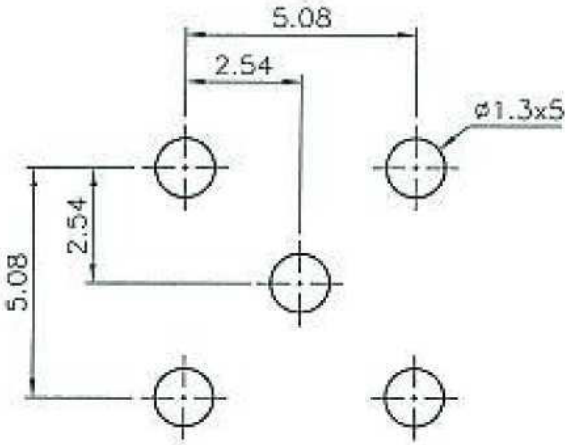

P.C.B. LAYOUT

NOTES: FINISH (PLATING THICKNESS IN MICRO-INCHES)
1. BRASS PER QQ-B-626
2. GOLD PL 3 MIN OVER NICKEL PL 70 MIN THICK OVER COPPER STRIKE
3. BERYLLIUM COPPER PER QQ-C-530 OVER COPPER STRIKE

RoHS COMPLIANT

NO.	DESCRIPTION	MATERIAL	FINISH	Q'TY	DRAWING NO.
	BODY	NOTE 1	NOTE 2		
	CONTACT PIN	NOTE 1	NOTE 2		
	INSULATOR	PTFE	WHITE		
	CONTACT BODY	NOTE 3	NOTE 2		

DIMENSIONS ARE IN MILLIMETERS

UNLESS OTHERWISE SPECIFIED TOLERANCES (一般公差)
0.5~6 = ±0.2
>6~30 = ±0.4
>30~120 = ±0.6
>120~315 = ±1
>315~1000 = ±1.6
ANGLES(角度) = ±5°

SCALE 6/1 ISSUE A2

PART NO.

APPROVED DATE 10/01/12'

CHECKED DATE 10/01/12'

DRAWN DATE 10/01/12'

GTK UK LTD.

TITLE MCX PCB MOUNT PLUG

DRAWING NO. MCX-M2T-GG25-R