FOR CUSTOMER

REMARK: RoHS COMPLIANT

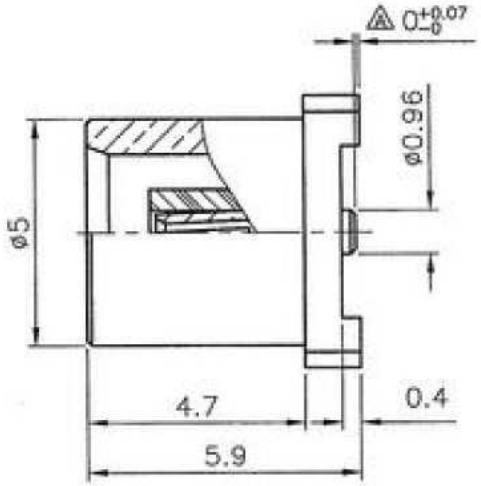

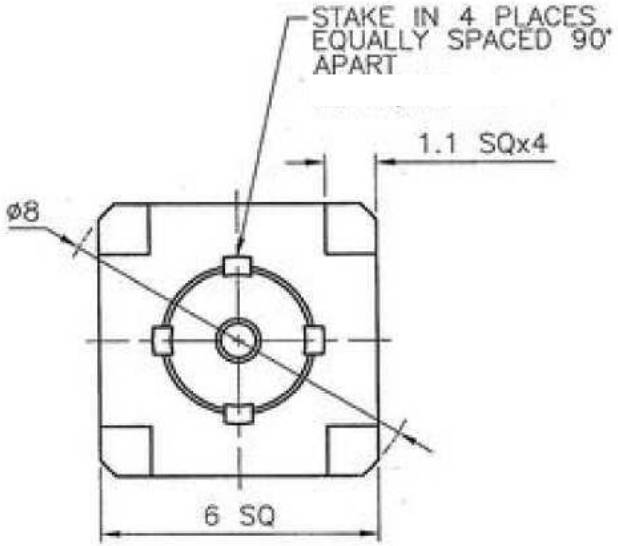

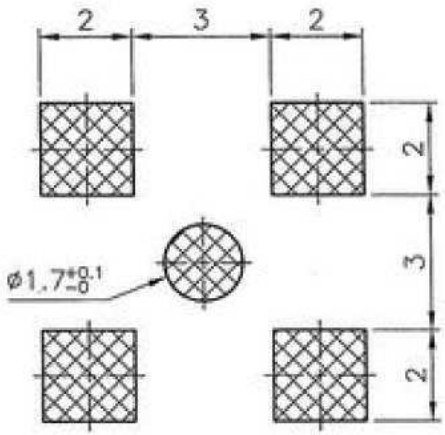

RECOMMENDED SOLDERING PADS

NOTES: FINISH (PLATING THICKNESS IN MICRO-INCHES)
1. BRASS PER QQ-B-626
2. GOLD PL 3 MIN OVER NICKEL PL 70 MIN THICK OVER COPPER STRIKE
3. GOLD PL 30 MIN OVER NICKEL PL 70 MIN THICK OVER COPPER STRIKE
4. TEFLON MIL-P-19468
5. BERYLLIUM COPPER PER QQ-C-530

NO.	DESCRIPTION	MATERIAL	FINISH	Q'TY	DRAWING NO.
	CONTACT PIN	NOTE 5	NOTE 3		
	INSULATOR	NOTE 4	WHITE		
	BODY	NOTE 1	NOTE 2		

DIMENSIONS ARE IN MILLIMETERS

UNLESS OTHERWISE SPECIFIED TOLERANCES (一般公差)
0.5~6 = ±0.2
>6~30 = ±0.4
>30~120 = ±0.6
>120~315 = ±1
>315~1000 = ±1.6
ANGLES(角度) = ±5'

SCALE 6/1 ISSUE A2

PART NO.

APPROVED DATE 06/11/09'

CHECKED DATE 06/11/09'

DRAWN DATE 06/11/09'

GTK UK LTD.

TITLE MCX SMT JACK

DRAWING NO. MCX-J2S-GG25-R