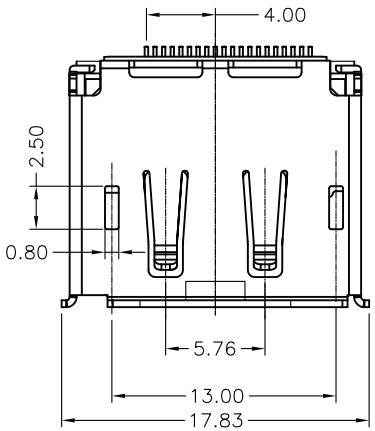


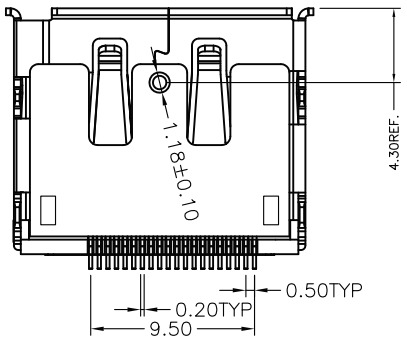


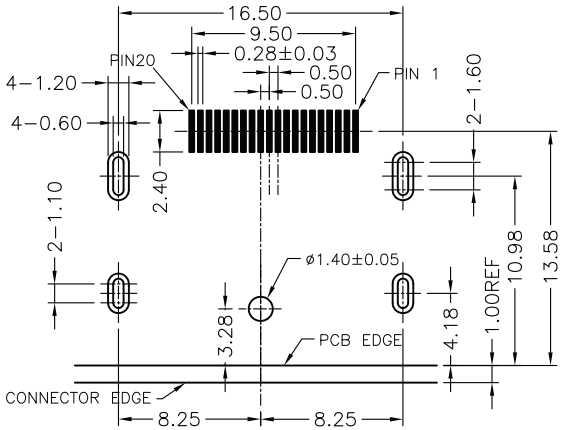


RECOMMENDED P.C.B LAYOUT(PCB THICKNESS: 1.6mm)
COMPONENT SIDE VIEW(TOLERANCE: ±0.05)

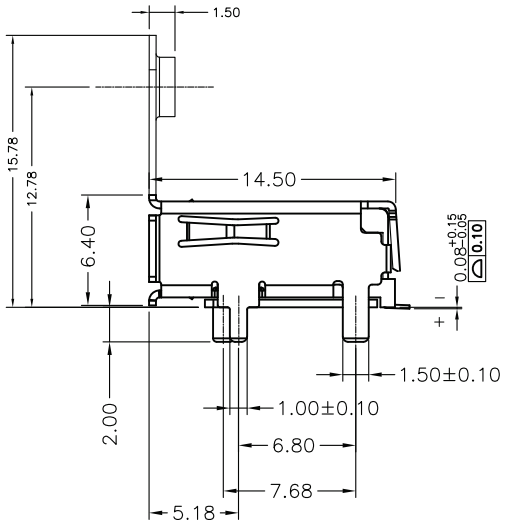


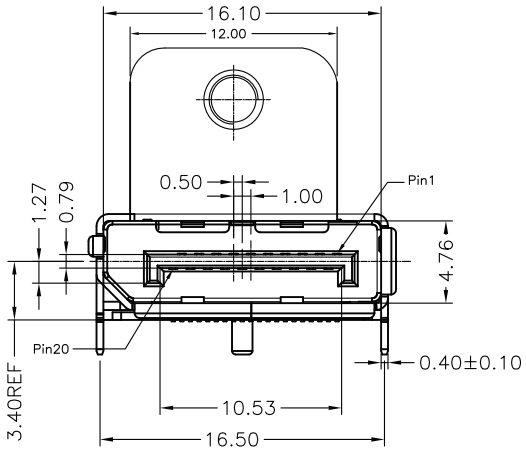


NOTE:
1.MATERIAL:
1.1 HOUSING: LCP, UL 94V-0
COLOR: BLACK.
1.2 CONTACT: C2680, T=0.20mm.
1.3 SHIELD: C2680, T=0.40mm.
1.4 COVER: LCP,UL 94V-0

2.FINISH:
2.1 CONTACT: GOLD(1U") PLATING IN CONTACT AREA,
80u"MIN Tin PLATED IN SOLDER AREA,
50u" MIN. NICKEL UNDERPLATED OVERALL.
2.2 SHIELD: 50u" MIN. NICKEL UNDERPLATED OVERALL.

3.MECHANICAL CHARACTERISTICS
3.1 RATING CURRENT: 0.5A
3.2 RATING VOLTAGE: 40V
3.3 CONTACT RESISTANCE: 40 mΩ MAX
3.4 INSULATION RESISTANCE:
a, UNMATED: 100MΩ MIN AT 500 VDC
b, MATED: 10M OHMS MIN AT 150 VDC
3.5 DIELECTRIC WITHSTANDING VOLTAGE: 500V AC/1MINUTE
3.6 DURABILTY: 10000 CYCLES.
3.7 OPERATING TEPERATURE: -20°C--+85°C
3.8 STORAGE TEMPERATURE: -20°C--+65°C

4. NOTES:
4.1 ALL COMPONENTS ARE RoHS COMPLIANT.
4.2 RESISTANCE TO SOLDERING HEAT: 265°C FOR 10 SECONDS.

| | | | | | | | | | | | | | |
|---|---|---|---|---|---|---|---|---|---|---|---|---|---|
| DIMENSIONS TOLERANCE METRIC .0=±0.30 .00=±0.20 .000=±0.10 ANG.=±2° | 單位(UNITS) | MM | 處理(FINISH) | SEE NOTE | 審校(CH'K) | Calvin | 圖名(NAME) Display Port RECEPTACLE SMT TYPE With Flange | | GTK UK LTD. | | | | |
| | 數量(QT'Y) | N/A | 繪圖(DRAW) | Johnson | 核准(APP'D) | Selena | 料號(PART NUMBER) | DPT-R1HF1G1PA-R | | | | | |
| | 材料(MT'L) | SEE NOTE | 設計(DE'N) | Mike | 日期(DATE) | AUG.10.2017 | 圖號(DRAW NUMBER) | C008 | 比例(SCALE) 1/1 | 圖紙(SIZE) A4 | 頁次(SHEET) 1 | 版次(REV.) A | |
| | | | | | | | 圖檔(FILE NAME .DWG) | | | | | | |